Evaluating internal blocking in non-contentionless flex-grid ROADMs [Invited]

Pablo Pavon-Marino, Maria-Victoria Bueno-Delgado, Jose-Luis Izquierdo-Zaragoza

***Abstract*—In heterogeneous flex-grid networks, optical connections for different line rates, spectral widths and modulations can coexist in the same infrastructure. Optical connections are transparently routed by Reconfigurable Add/Drop Multiplexers (ROADMs). Flex-grid ROADMs are enabled by state-of-the-art evolution from original Wavelength-Selective-Switches (WSS), designed for fixed-grid applications, to WSSs that operate in flexible grids. Broadcast-and-select (B&S) flex-grid ROADMs are subject to the same internal blocking as their fixed grid counterparts, and this internal blocking can be also reduced by augmenting the number of add/drop transponder banks. In this paper, we dimension the number of transponder banks *C* required in flex-grid ROADMs, to make the internal blocking negligible. To this end, we present a graph transformation that takes a network topology based on B&S ROADMs and converts it into an equivalent network composed of contentionless ROADMs. Then, any conventional (non-contention-aware) algorithm can be applied to the transformed topology to make lightpath allocations. Our results show that often *C*=2, and in some cases *C*=1, transponder banks are enough to eliminate internal contention in practice. Interestingly, these results are similar to the ones obtained in the fixed-grid case. This is not an obvious conclusion, since spectrum fragmentation in flex-grid networks may amplify internal blocking. Results have been obtained using the Net2Plan 0.2.3 open-source tool. Algorithms' source code and data are available in Net2Plan public repository for reuse and validation.**

***Index Terms*— Colorless-Directionless Contentionless ROADMs; flexible optical networks; internal blocking, open-source planning tool.**

I. Introduction

Transparent optical networks are the keystone infrastructure supporting the Internet backbone. In these core networks, traffic is carried over end-to-end optical connections called lightpaths. A lightpath originates at an E/O transmitter in the ingress or *add* node, and terminates at an O/E receiver in the egress or *drop* node. Lightpaths are allocated over a wavelength in each traversed fiber, and are optically switched or *bypassed* at intermediate nodes.

Flex-grid or *elastic* optical networks are the foreseen near-future evolution of transparent networks [1], enabled by the advent of new coherent modulation formats such as OFDM or Nyquist WDM [2]. In conventional transparent optical networks, a lightpath has a fixed line rate, typically 10, 40 or 100 Gbps, and is allocated in a 50 GHz or 100 GHz channel within the DWDM ITU grid. In contrast, in flex-grid networks, lightpaths are allocated over a contiguous spectrum composed of 12.5 GHz slots (according to ITU-T Recommendation G.694.1), and fill it with one or more OFDM subcarriers. The line rate of the lightpath depends on the modulation employed and the spectral width assigned. A new design trade-off appears in the selection of the transmission modulation of a lightpath: more robust modulations like BPSK have a longer reach (km), at a cost of a lower spectral efficiency (bps/Hz) respect to more sophisticated modulations like 16-QAM.

Optical Add/Drop Multiplexers (OADMs) are the optical equipment in charge of implementing the add, drop and bypass operations of the lightpaths in the nodes. Reconfigurable OADMs (ROADMs) are more agile versions of this equipment, where a part of the optical switching functionality can be software-controlled by the management or control plane, and thus some node reconfigurations can be completed without on-site manual intervention. Versatile ROADMs are the enabling equipment for reducing network operation costs, building lightpath-on-demand services, or converting fast lightpath restoration into a viable strategy. Current generation of ROADMs requires the so-called directionless and colorless add/drop ports. Directionless feature means that add (drop) transponders can handle lightpaths going to (coming from) any output (input) fiber. Colorless feature adds the possibility to change the wavelength in an add/drop transponder without manual intervention.

Colorless-Directionless (CD) ROADMs with full interconnection between ports and routes, called Contentionless CD-ROADMs, would have an enormous complexity using state-of-the-art technologies and architectures [3]. Several ROADM architectures have been

Manuscript received July 1, 2014.

Pablo Pavon-Marino, Maria-Victoria Bueno-Delgado and Jose-Luis Izquierdo-Zaragoza are with the Universidad Politécnica de Cartagena, Pza. Hospital 1, 30202, Cartagena, Spain (e-mail: {pablo.pavon, mvictoria.bueno, josel.izquierdo}@upct.es).

.

proposed to reduce the node cost by admitting some amount of internal blocking in the ROADM. Fig. 1 shows the most common approach, based on a broadcast-and-select scheme [3]. The ROADM in Fig. 1 has three input/output fiber or directions, called East, West and North. The optical signal from a specific direction is broadcasted to the other directions' modules and to the add/drop modules or transponder banks. The drop side of these modules consists of a passive demultiplexer that separates the WDM optical channels into different output ports, where transponders are placed. In the output side of each direction, a Wavelength Selective Switch (WSS) combines the channels coming from other directions and from the add module. The WSS is a reconfigurable device that is able to switch any set of contiguous wavelength channels at any of its input ports, to any of its output ports. In the add module, the transponders are connected to the adequate ports of a multiplexer (according to their wavelength), which injects the multiplexed signal into an input port of the WSS. ROADMs like the ones shown in Fig. 1 are feasible today in the flex-grid context, thanks to the state-of-the-art evolution from original WSS devices, designed for fixed-grid applications [4], to e.g. Liquid Crystal on Silicon (LCoS)-based WSSs that perform the selection feature in flexible grids [5].

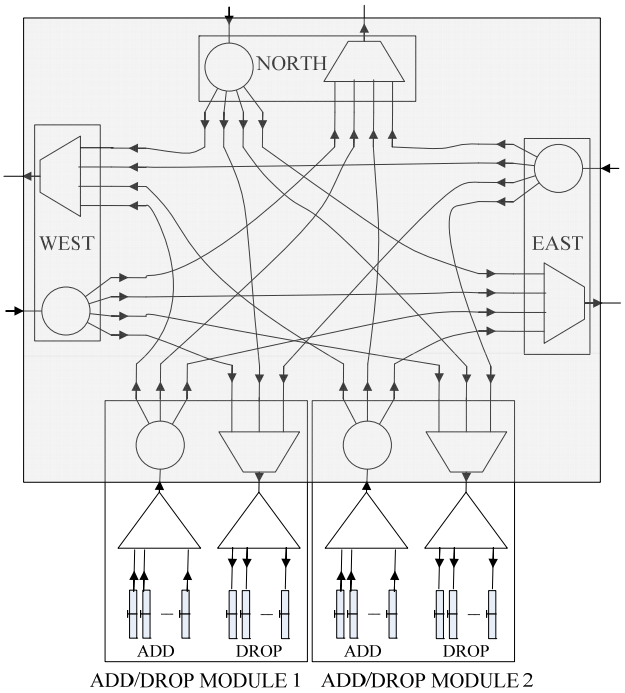

Fig. 1. B&S ROADM architecture

The number of transponder banks or add/drop modules in Fig. 1 schemes defines the so-called add/drop contention factor C of the ROADM [6]: the maximum number of lightpaths that can be added/dropped using the same wavelength. In the limit, *contentionless* nodes are those ROADMs in which the contention limitation is totally eliminated, e.g. using as many transponder banks as directions. Naturally, a non-contentionless ROADM can suffer from internal lightpath blocking. This occurs when a lightpath added or dropped in a ROADM cannot be allocated in any transponder bank, since its spectrum overlaps with previously established lightpaths.

In this paper, we are interested in evaluating the number of transponder banks required in ROADMs, like the one in Fig. 1, to make their internal blocking negligible in practice. This is a relevant topic, since it is not clear how the higher spectrum fragmentation appearing in flex-grid networks, may exacerbate internal blocking. First, we present a simple methodology that permits using a conventional (non-contention-aware) flex-grid lightpath provisioning algorithm, targeted for networks of contentionless ROADMs, applying it to a network with ROADMs like the one in Fig. 1, that is, to produce lightpath allocations that are free of internal blocking. This methodology is based on a simple transformation of the original network topology, into a new topology where each original node is replaced by three nodes, representing the add, drop and interconnection parts of the original ROADM, respectively. We will apply this approach together with a state-of-the-art fragmentation-aware lightpath allocation algorithm for flex-grid networks [7]. Then, we conduct two different studies to dimension the number of transponder banks C in several reference network topologies. In the first study, a lightpath-on-demand service is emulated, and blocking probability is the metric of interest. In the second one, lightpaths arrive randomly and after being allocated become persistent. The metric of interest is the amount of traffic carried before the first blocking event occurs, meaning that a capacity expansion of the traffic would be needed. Both models reflect possible operational scenarios of the network.

The algorithm and the studies presented have been elaborated within the open-source Net2Plan framework (version 0.2.3), also developed by the authors. Net2Plan has been recently presented [8][9] as an open-source solution suitable for bridging the gap between the academia and industry. Net2Plan is currently used in both teaching and research activities. The algorithms' source code (Java) and input traffic data in this paper are publicly available at Net2Plan repository [10], for reuse or modification. The information in the repository would permit the interested reader repeating these results, or extending them in different scenarios.

The rest of the paper is organized as follows. Section II collects related work in the topic. Section III describes the graph transformation procedure proposed. Section IV reports the results obtained. Finally, Section V concludes the paper.

II. Related Work

Previous works dimensioning the ROADM contention factor focus on the conventional fixed-grid case. Results presented in [6][11][12][13][14][15] have shown that, if the network is appropriately planned, it is possible to mitigate or even eliminate the lightpath blocking caused by add/drop contention.

In [6], the Add/Drop Contention-Aware Routing and Wavelength Assignment (ADCA-RWA) problem was investigated in the offline case, for unprotected and 1+1 protected lightpaths. An ILP model and a heuristic were proposed. It was shown that, if the ROADMs were equipped

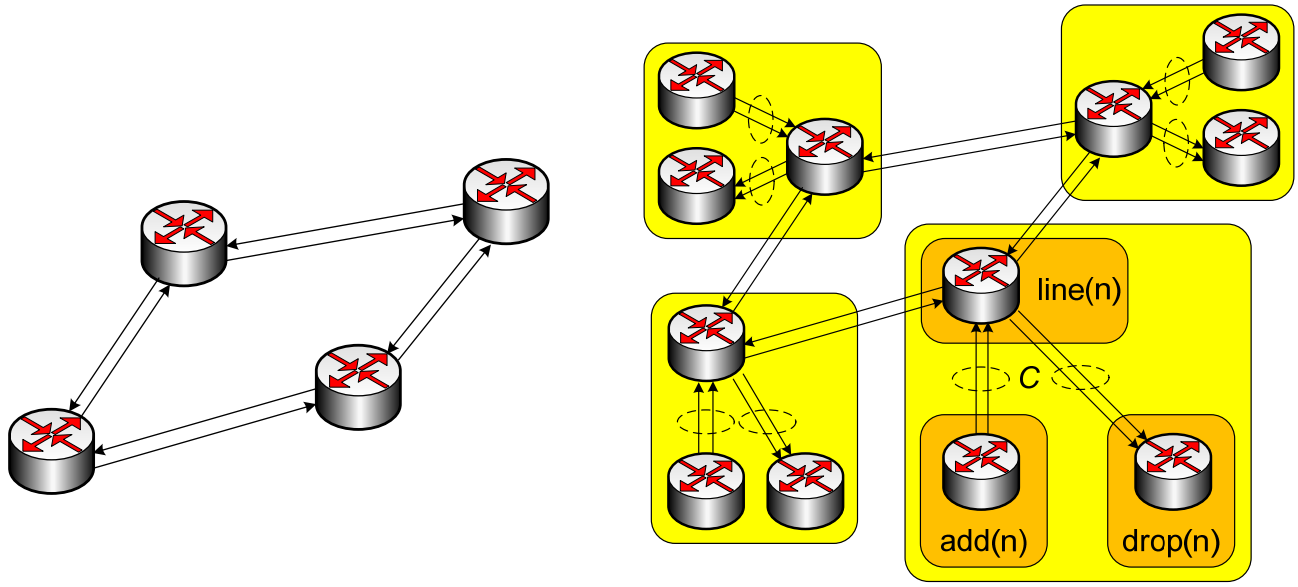

(a) (b)

Fig. 2. Topology transformation example. (a) Original topology, (b) transformed topology.

In this section, we present a transformation procedure that takes an optical network based on B&S ROADMs like Fig. 1, and converts it into an optical network composed of contentionless ROADMs. The transformation is such that any routing, modulation and spectrum lightpath allocation that is feasible in the transformed topology, would be also feasible, and thus free of add/drop blocking, in the transformed topology.

Let $G(N,E)$ be a network topology representing an optical network, where N is the set of B&S ROADMs in the network, and E the set of optical links among them. Let D be the set of offered traffic demands, representing the lightpaths to be carried in the network. We denote as $a(d)$ and $b(d)$ respectively, to the add and drop nodes of the lightpath.

Let $G'(N',E')$ be a transformed topology, to be computed from the original topology G, where the N' is the new set of nodes and E' the new set of links among them. The transformed topology G' is calculated as follows:

- Each B&S ROADM $n \in N$ is transformed into three different nodes, denoted as $add(n)$, $drop(n)$, $line(n)$, representing the add side, drop side and line side of the original ROADM n. The add side node $add(n)$ stands for the electronic equipment where the lightpaths added in the original ROADM n originate. That is, all the add modules of ROADM n in Fig. 1. Similarly, the drop side node $drop(n)$ represents where dropped lightpath at n terminate (all the drop modules in Fig. 1). Finally, the line side node $line(n)$ represents the blocking free part of original ROADM n, the shaded part in Fig. 1. Note that this is a contentionless ROADM, with one input link per add module and input direction, and one output link per drop module and output direction.
- Each original B&S ROADM n adds a set of 2xC links to topology. Note that any routing, modulation and spectrum assignment that is valid (no spectrum overlapping in any fiber) in the transformed topology, is an assignment that is also valid in the original topology, and in particular, is free of internal add/drop contention.

Fig. 2a and Fig. 2b illustrate the described transformation, for a network of four nodes and C=2 transponder banks each.

IV. Results

This section collects and analyzes extensive results evaluating the performance impact in a flex-grid network, of the number of add/drop modules C in the ROADMs. Four reference network topologies, together with their corresponding reference traffic matrices are used: Internet2 [17], NSFNET [18], and the topologies tagged as COST266 [19] and Atlanta [20] in the Net2Plan repository. All of the topologies and traffic matrices are available in Net2Plan 0.2.3 release [10]. Table I summarizes some relevant data of these topologies. We assume that each node in the network topology is equipped with a flex-grid ROADM like the one in Fig. 1, with a number of add/drop modules given by the contention factor C. In each test, we produce results for factors C={1,2,3}. For comparison purposes, we also repeat the tests for networks composed of contentionless ROADMs.

Traffic demands to the network are composed of lightpath requests of bit rates BW={10, 40, 100, 400} Gbps, with equal probability. Given a lightpath request, the Fragmentation and Misalignment-Aware Routing and Spectrum Assignment (FMA-RSA) algorithm [7] is applied to the *transformed topology* to decide on the lightpath route, modulation and spectrum assignment.

The FMA-RSA algorithm is targeted to choose among a set of K pre-computed paths, the one that minimizes a fragmentation-related metric. The algorithm allocates each new lightpath requests in such a way that fragments the

least number of continuous spectral blocks on candidate links, while it fills up as many misaligned spectral slots as possible on neighbor links. Thanks to the topology transformation algorithm, we can apply the original algorithm in [7], already implemented in Net2Plan for work [21], without any modification for the ADCA problem. In the contentionless tests, the set of pre-computed paths contains K=10 shortest paths (in number of hops) between the origin and destination nodes in the original topology. For C={1,2,3} values, each original path is replaced by C^2 new paths from the add to the drop nodes, covering all the C^2 possible allocations of transponder banks at the ingress and egress nodes.

Table II shows the bandwidth requirements and optical reach of each line rate and modulation. These values are similar to those used in [21]. Guard-bands are omitted. The total spectrum available per fiber is 4.5 THz, and the slot granularity is 12.5 GHz, giving a total of 360 frequency slots per fiber.

We produce two sets of simulation studies: (i) the blocking model (or long-run), (ii) the incremental (or first-passage) model. In the blocking model, lightpath requests randomly arrive and depart. Depending on traffic random fluctuations, some requests may be blocked. Thus, we are interested in assessing the impact in *blocking probability* of the ROADM contention factor. In its turn, in the incremental model, the simulation starts with an empty network (no lightpath is established). Then, lightpath requests arrive randomly, but all have an infinite holding time, and thus are *permanent*. The same algorithm as in the previous case is responsible of allocating resources for the requests, which are never released. Eventually, a lightpath request will be blocked. The *network throughput* is our metric of interest: the amount of traffic (in Gbps) that was served before the first blocking event.

Both blocking and incremental models are of interest for operators and service providers. The blocking model is consistent with a long-term bandwidth-on-demand market, where some rare rejecting events (i.e. 1%) may be admissible. The incremental model is added to reflect present-day operation of networks not offering on-demand optical connection services: permanent connections are set up, and never or seldom modified.

TABLE I
INFORMATION ON THE TOPOLOGIES TESTED

	Internet2	NSFNET	COST266	Atlanta
Reference	[16]	[17]	[18]	[19]
#Nodes	9	14	37	15
#Unid. Links	26	42	114	44
Average node degree	2.89	3	3.08	2.93
Network diameter (km)	4500	4500	5131,68	6000

TABLE II
NUMBER OF SLOTS REQUIRED FOR EACH SERVICE AND MODULATION FORMAT

Modulation format	Optical reach (km)	Spectral efficiency (bps/Hz)	Bandwidth requirements (Gbps)			
			10	40	100	400
BPSK	9600	1	1	4	8	32
QPSK	4800	2	1	2	4	16
8-QAM	2400	3	1	2	3	11
16-QAM	1200	4	1	1	2	8

A. Blocking model

In the blocking model, connection requests follow a Poisson process with an average rate λ, and holding time following a negative exponential distribution with mean time equal to one time unit. Inter-arrival times (1/λ) are the same to all line rates within each origin-destination node pair, and this value is adjusted so that the average amount of offered traffic matches the values given by the simulation input traffic matrix *M*. Traffic matrices used in each topology are scaled versions of their reference traffic matrices, normalized for different load values. Matrix associated to 100% load is obtained computing the maximum scaled version of the reference matrix that has a feasible shortest-path (in number of hops) routing across the network, using the most spectrum-efficient modulation available in each path. Here, feasible means that any fiber is not over-subscribed in terms of total spectrum available (in GHz). Then, different load factors are tested in each topology (shown in the horizontal axis), ranging from a low-traffic situation where blocking is negligible, to a high-traffic situation where blocking becomes unacceptable. Our metric of interest is the Bandwidth-Blocking Probability (BBP) [22], which is calculated as the sum of the blocking probabilities B_r observed by the lightpath of each line rate r={10,40,100,400} Gbps, weighted by its rate. That is, the ratio of the total amount of Gbps blocked, with respect to the total amount of Gbps offered to the network.

Fig. 3abcd shows the results corresponding to the blocking model, for the four different topologies. In each test, 10^6 connection requests are simulated, with a transitory of 10^5 connections. Results show that for Internet2 and COST266 topologies, the differences between equipping ROADMs with C=2 modules, or using contentionless equipment becomes negligible. In the Atlanta and NSFNET topologies, differences between C=2 and contentionless case are small, but is on the network carrier side qualifying them as negligible or not.

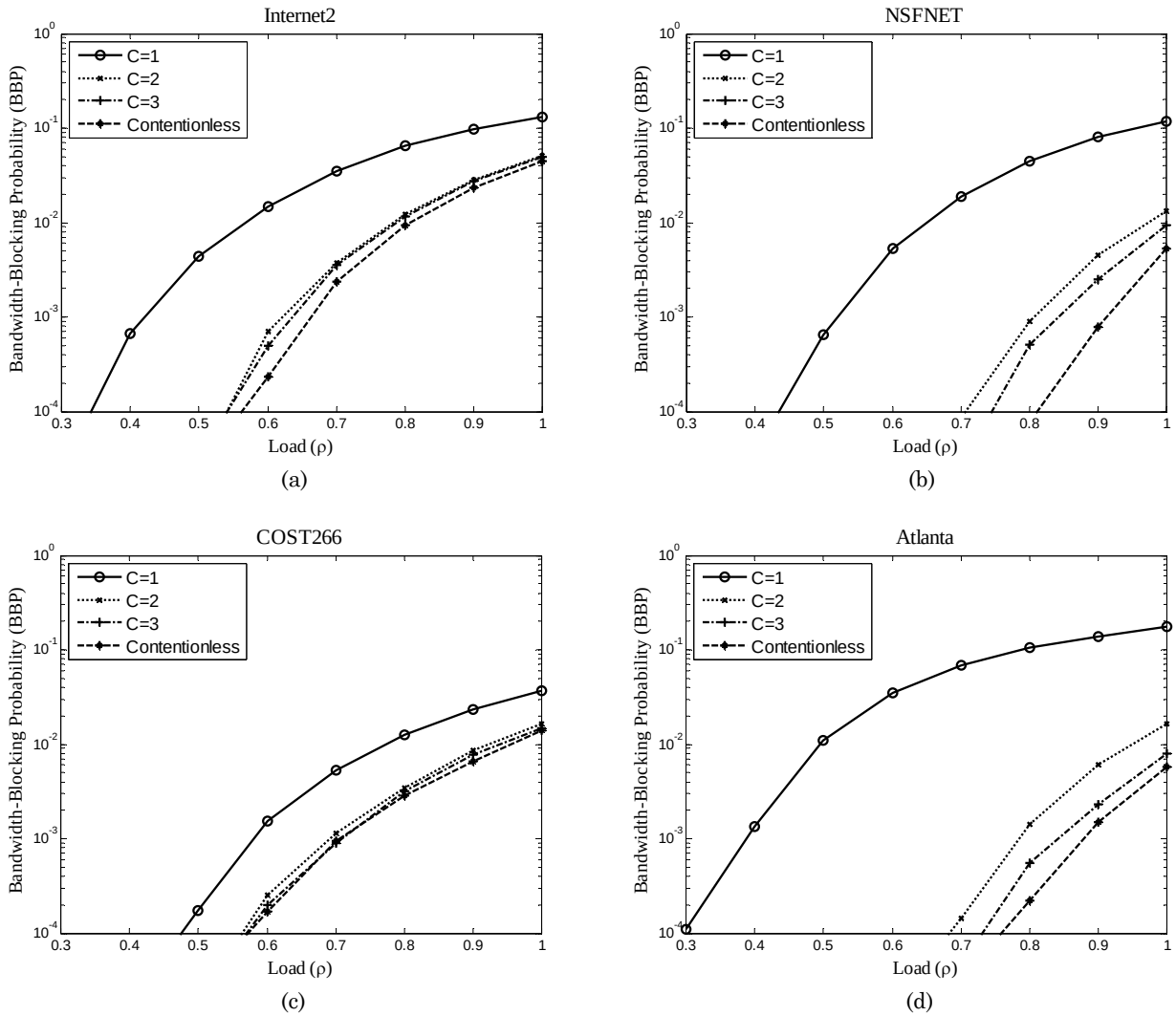

Fig. 3. Blocking model: Bandwidth-blocking probability for different networks, traffic loads and contention factor: (a) Internet2, (b) NSFNET, (c) COST266, (d) Atlanta.

B. Incremental model

Fig. 4 shows the results for the incremental model. Our metric of interest is the *network throughput*, defined as the amount of carried traffic before the first blocking event occurs. The values plotted in Fig. 4 for each test, correspond to the averaged network throughput after 1000 runs of the simulation.

Results show that in all the cases, C=2 modules are enough to provide a similar network throughput respect to the contentionless case. In some topologies (Internet2, NSFNET), the operator may consider ROADMs with C=1 as an attractive option. An anomaly is detected in the C=3 case for COST266 topology, which provides a slightly *worse* throughput than the C=2 case. We speculate that this behavior is a topological effect that can appear because of the form in which the FMA-RSA algorithm allocates resources.

C. Net2Plan open-source simulation platform

Tests in this paper have been completed using the Connection-Admission-Control (CAC) simulation tool within Net2Plan 0.2.3 [10]. The source code of the connection generator module and the FMA-RSA algorithm implementation is available in the Net2Plan repository, making the results in this paper easily reproducible by interested readers. Both the blocking model and the incremental model simulations are executed with the same connection generation and allocation algorithm modules, just checking or not the *incremental model* parameter in Net2Plan. Fig. 5 shows a snapshot of the graphical user interface in the CAC simulation tool. Interested readers can use this interface to reproduce the tests. In the upper left-hand side, the buttons and panel permit loading and then show the network design over which the simulations are made. The simulation can be started, paused and stopped using the buttons below this panel. In the right-hand side, the user can tune the simulation input parameters, and also execute the reports that provide the simulation metrics computed. In this paper, the Net2Plan command line interface (CLI) that permits building batch executions of simulations was used, given the large amount of simulation runs involved. The user is referred to Net2Plan user manuals [10] for complete information on both GUI and CLI interfaces.

V. Conclusions

In this paper, we evaluated the internal blocking in broadcast-and-select ROADMs in flex-grid networks, with the aim of dimensioning the number of transponder banks required to make such internal blocking negligible. To this end, we present a graph transformation technique that permits applying resource allocation algorithms for flex-grid networks with contentionless ROADMs, to any network with non-contentionless nodes. According to our results, in most of the cases C=2 transponder banks are enough to match the performance provided by contentionless ROADMs. These dimensioning results are approximately similar to the ones obtained for fixed-frid networks. This suggests that the natural spectrum fragmentation in flex-grid networks does not significantly penalize the internal blocking of non-contentionless ROADMs. Simulations in this paper have been completed using the open-source Net2Plan tool [9]. Source code and data used are publicly available in Net2Plan repository [10] for reuse, public inspection and validation.

Acknowledgment

This work was partially supported by the FPU fellowship program of the Spanish Ministry of Education, Culture and Sport (ref. no. FPU12/04571) and research project 3704/13TIC.

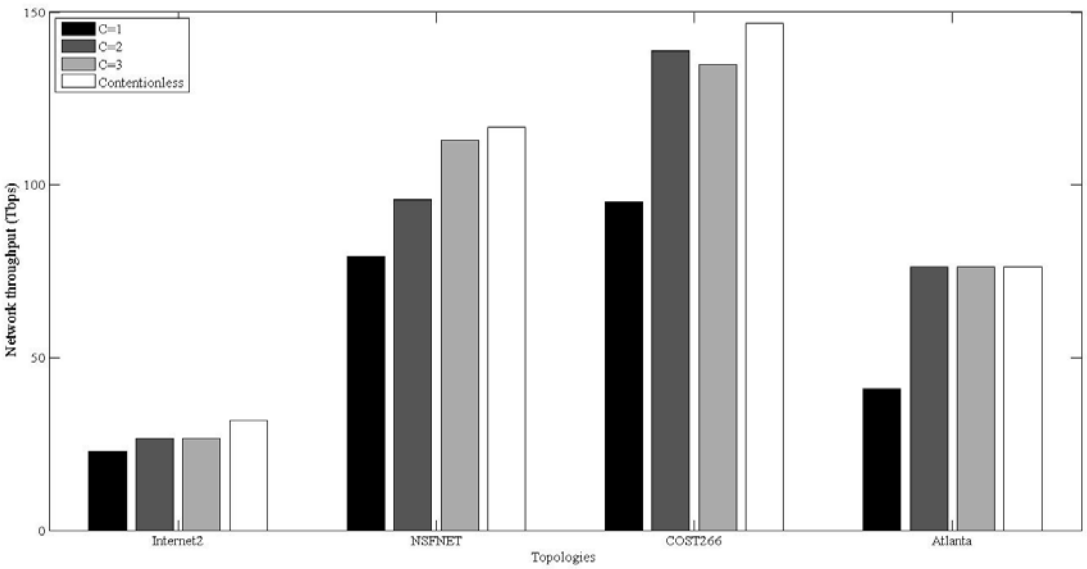

Fig. 4. Incremental model: Network throughput for different networks and contention factor.

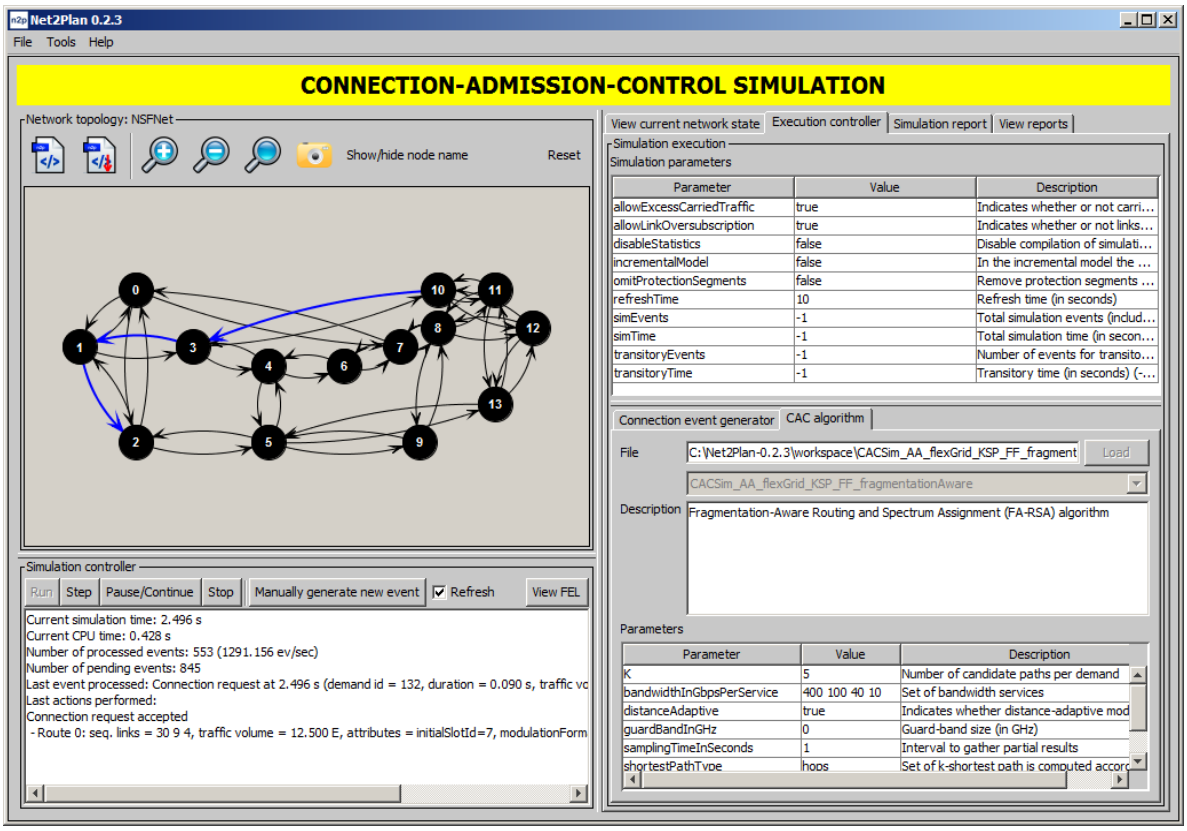

Fig. 5. Connection-admission-control (CAC) simulation tool.

REFERENCES

[1] O. Gerstel, M. Jinno, A. Lord, and S.J. Ben Yoo, "Elastic Optical Networking: A New Dawn for the Optical Layer?," *IEEE Communications Magazine,* vol. 50, no. 2, pp. 12-20, February 2012.

[2] E. Palkopoulou, G. Bosco, A. Carena, D. Klonidis, P. Poggiolini, and I. Tomkos, "Nyquist-WDM-based flexible optical networks: exploring physical layer design parameters," *IEEE/OSA Journal of Lightwave Technology*, vol. 31, no. 14, pp. 2332–2339, July 2013.

[3] S. Gringeri, B. Basch, V. Shukla, R. Egorov, and T.J. Xia, "Flexible architectures for optical transport nodes and networks," *IEEE Communications Magazine*, vol. 48, no. 7, pp. 40-50, August 2010.

[4] D.M. Marom, D.T. Neilson, D.S. Greywall, C.-S. Pai, N.R. Basavanhally, V.A. Aksyuk, D.O. López, F. Pardo, M.E. Simon, Y. Low, P. Kolodner, and C. A. Bolle, "Wavelength-Selective 1xK Switches Using Free-Space Optics and MEMS Micromirrors: Theory, Design, and Implementation," *IEEE/OSA Journal of Lightwave Technology*, vol. 23, no. 4, pp. 1620-1630, April 2005.

[5] S. Frisken, G. Baxter, D. Abakoumov, H. Zhou, I. Clarke and S. Poole, "Flexible and Grid-less Wavelength Selective Switch using LCOS Technology," in *Proc. Optical Fiber Communication Conference and the National Fiber Optic Engineers Conference* (OFC/NFOEC 2011), Los Angeles (USA), March 2011.

[6] P. Pavon-Marino and M.-V. Bueno-Delgado, "Dimensioning the add/drop contention factor of directionless ROADMs," *IEEE/OSA Journal of Lightwave Technology*, vol. 29, no. 21, pp. 3265-3274, November 2011.

[7] Y. Yin, H. Zhang, M. Zhang, M. Xia, Z. Zhu, S. Dahlfort, and S.J. Ben Yoo, "Spectral and Spatial 2D Fragmentation-Aware Routing and Spectrum Assignment Algorithms in Elastic Optical Networks," *IEEE/OSA Journal of Optical Communications and Networking*, vol. 5, no. 10, pp. 100-106, October 2013.

[8] P. Pavon-Marino and J.-L. Izquierdo-Zaragoza, "On the Role of Open-Source Optical Network Planning," in *Proc. Optical Fiber Communication Conference* (OFC 2014), San Francisco (USA), March 2014. *Invited.*

[9] P. Pavon-Marino and J.-L. Izquierdo-Zaragoza, "Net2Plan: An open-source network planning tool for bridging the gap between academia and industry," *IEEE Network Magazine*. In press.

[10] Net2Plan – The open-source network planner [Online]. Available: http://www.net2plan.com [Last accessed: June 25, 2014]

[11] P. Pavon-Marino and M.-V. Bueno-Delgado, "Add/Drop Contention-Aware RWA with directionless ROADMs: the Offline Lightpath Restoration case," *IEEE/OSA Journal of Optical Communications and Networking*, vol. 4, no. 9, pp. 671-680, September 2012.

[12] P. Pavon-Marino and M.-V. Bueno-Delgado, "Distributed online RWA considering add/drop contention in the nodes for directionless and colorless ROADMs," in *Proc. Optical Fiber Communication Conference and National Fiber Optic Engineers Conference* (OFC/NFOEC 2012), Los Angeles (USA), March 2012.

[13] J.-L. Izquierdo-Zaragoza, M.-V. Bueno-Delgado, and P. Pavon-Marino, "Evaluating add/drop contention blocking in non-contentionless ROADMs," in *Proc. 16th International Conference on Transparent Optical Networks (ICTON 2014)*, Graz (Austria), July 2014.

[14] M. D. Feuer, S. L. Woodward, P. Palacharla, X. Wang, I. Kim, and D. Bihon, "Intra-node contention in dynamic photonic networks", *IEEE/OSA Journal of Lightwave Technology*, vol. 29, no. 4, pp. 529-535, Feb. 2011.

[15] P. Palacharla, X. Wang, I. Kim, D. Bihon, M. D. Feuer, and S. L. Woodward, "Blocking performance in dynamic optical networks based on colorless, non-directional ROADMs", in *Proc. Optical Fiber Communication Conference and the National Fiber Optic Engineers Conference* (OFC/NFOEC 2011), Los Angeles (USA), March 2011.

[16] S. Talebi, F. Alam, I. Katib, M. Khamis, R. Salama, and G-N. Rouskas, "Spectrum management techniques for elastic optical networks: A survey," *Optical Switching and Networking,* vol. 13, pp. 34-48, July 2014.

[17] Internet 2 Global Research Network Operations Center. [Online]. Available: http://noc.net.internet2.edu/ [Last accessed: June 25, 2014]

[18] R. Ramaswami and K.N. Sivarajan, "Design of Logical Topologies for Wavelength-Routed Optical Networks," *IEEE Journal on Selected Areas in Communications*, vol. 14, no. 5, pp. 840-451, June 1996.

[19] R. Inkret, A. Kuchar, B. Mikac, C.M. Gauger, and M. Köhn, "Advanced Infrastructure for Photonic Networks: Extended Final Report of COST Action 266," Faculty of Electrical Engineering and Computing, University of Zagreb, Croatia, 2003.

[20] Atlanta reference network [Online]. Available: http://sndlib.zib.de/coredata.download.action?objectName=atlanta&format=native&objectType=network [Last accessed: June 25, 2014]

[21] J.-L. Izquierdo-Zaragoza, P. Pavon-Marino, and M.-V. Bueno-Delgado, "Distance-adaptive online RSA algorithms for heterogeneous flex-grid networks," in *Proc. 18th International Conference on Optical Network Design and Modeling (ONDM 2014)*, Stockholm (Sweden), May 2014.

[22] B. Mukherjee, *Optical WDM Networks*, Springer, 2006.

Pablo Pavon-Marino received the M.Sc. degree in Telecommunication Engineering in 1999 from the University of Vigo, Spain. In 2000, he joined the Universidad Politécnica de Cartagena, Spain, where he is Associate Professor in the Department of Information Technologies and Communications. He received the Ph.D. degree from this University in 2004, and a M.Sc. degree in Mathematics in 2010. His research interests include the planning and optimization of communication networks.

Maria-Victoria Bueno-Delgado received her M.Sc. degree and Ph.D. in Telecommunications Engineering in 2004 and 2010 respectively, both from Universidad Politécnica de Cartagena (UPCT), Spain. In 2004, she joined at UPCT as researcher in Information Technologies and Communications Department and in 2006 she joined as Assistant professor in the same University. Her research interests include anti-collision protocols and deployment techniques in RFID systems, WSN and optical switching.

Jose-Luis Izquierdo-Zaragoza received his B.Sc. in Telecommunications and M.Sc. in Information Technologies and Communications in 2010 and 2011, respectively, from the Universidad Politécnica de Cartagena, Spain, where he is currently working toward the Ph.D. degree in the Department of Information Technologies and Communications. His research interests include planning and performance evaluation of optical networks.